The grating monochromator

JINTIAN WANG, Exeter College, Oxford

March 10, 2026

Abstract

1

1 Introduction

As quantum theory developed, energy levels of atoms were found to be quantized, and the emission spectra of atoms were found to consist of discrete lines. By measuring the wavelengths of these lines, the energy levels of atoms could be determined, and we can verify the predictions of quantum theory. In this experiment, we will use a Czerny-Turner monochromator to measure the emission spectrum of a mercury lamp, and determine the energy levels of mercury atoms. Then we will use the same monochromator to measure the emission spectrum of a hydrogen lamp, and determine the wavelengths each emission line corresponds to.

2 Theory

In the Czerny-Turner monochromator, concave mirrors are used to collimate the beam of light falling on the grating and to focus those beams diffracted from the grating, as shown in figure 1.

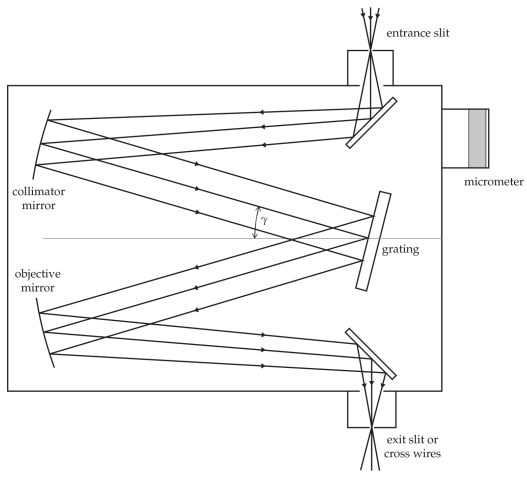

Figure 1: Czerny–Turner monochromator.

Grating size	48 mm × 48 mm
Ruling frequency ($1/d$)	1200 lines/mm
Mirror diameter	63.5 mm
Mirror radius of curvature	439 mm
Czerny–Turner angle, γ	25°28′
Length of sine-bar, l	75.24 mm

Table 1: Design parameters of the Czerny-Turner monochromator.

According to [1], the wavelength λ of the light diffracted by the grating is given by

$$\lambda = z\left(\frac{2d\cos\gamma}{pl}\right), \tag{1}$$

where z is the reading on the sine-bar, d is the grating spacing, γ is the Czerny–Turner angle, p is the ruling frequency of the grating, and l is the length of the sine-bar. Take the data in table 1, we can calculate coefficient $2d\cos\gamma/pl = 2.000 \times 10^{-5}$.

3 Experimental Setup

3.1 Calibration

We use a mercury lamp to calibrate the monochromator. The mercury lamp emits light at several discrete wavelengths, which can be used as reference points for calibration. We will measure the sine-bar readings corresponding to these known wavelengths, and use them to determine the relationship between the sine-bar reading and the wavelength.

Since the lines are hard to distinguish, two person will take turns to obtain the readings, and the average of the two readings will be taken as the final reading for each line. Each line will be measured three times, and the average of the three measurements will be taken as the final reading for that line. The readings will be recorded in a table, and a graph of wavelength versus sine-bar reading will be plotted to determine the calibration curve.

3.2

4 Data

Wavelength (Å)	Reading 1 (mm)	Reading 2 (mm)	Reading 3 (mm)	Average (mm)
4047.7	20.39	20.39	20.42	20.40
4079.0	20.55	20.57	20.58	20.57
4109.2	20.69	20.72	20.71	20.71
4340.4	21.90	21.92	21.89	21.90
4348.7	21.95	21.95	21.95	21.95
4359.5	22.00	22.02	22.01	22.01
4917.3	24.88	24.89	24.89	24.89
4961.7	25.12	25.12	25.11	25.12
5027.0	25.46	25.46	25.46	25.46
5047.0	25.56	25.54	25.55	25.55
5462.2	27.73	27.72	27.72	27.73
5677.4	28.84	28.84	28.84	28.84
5771.2	29.32	29.33	29.34	29.33
5792.2	29.43	29.44	29.44	29.44
5860.9	29.82	29.81	29.82	29.82
5891.6	29.96	29.95	29.96	29.96
6074.4	30.91	30.89	30.92	30.91
6125.2	31.17	31.18	31.17	31.17
6236.1	31.75	31.75	31.77	31.76
6718.3	34.29	34.32	34.30	34.30
6909.4	35.33	35.33	35.33	35.33

Table 2: Spectrometer calibration measurements

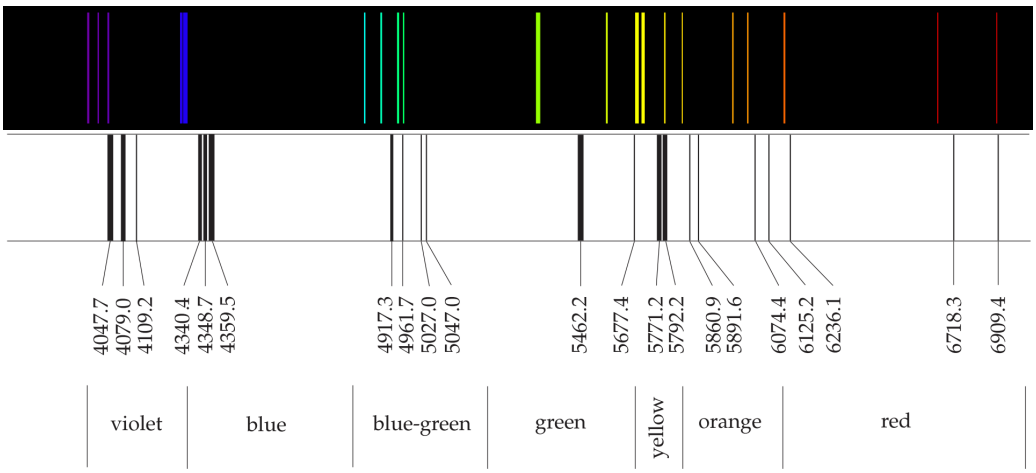

Figure 2: Corresponding mercury spectrum [1]

5 Analysis

5

6 Conclusion

6

References

[1] OP13: The grating monochromator